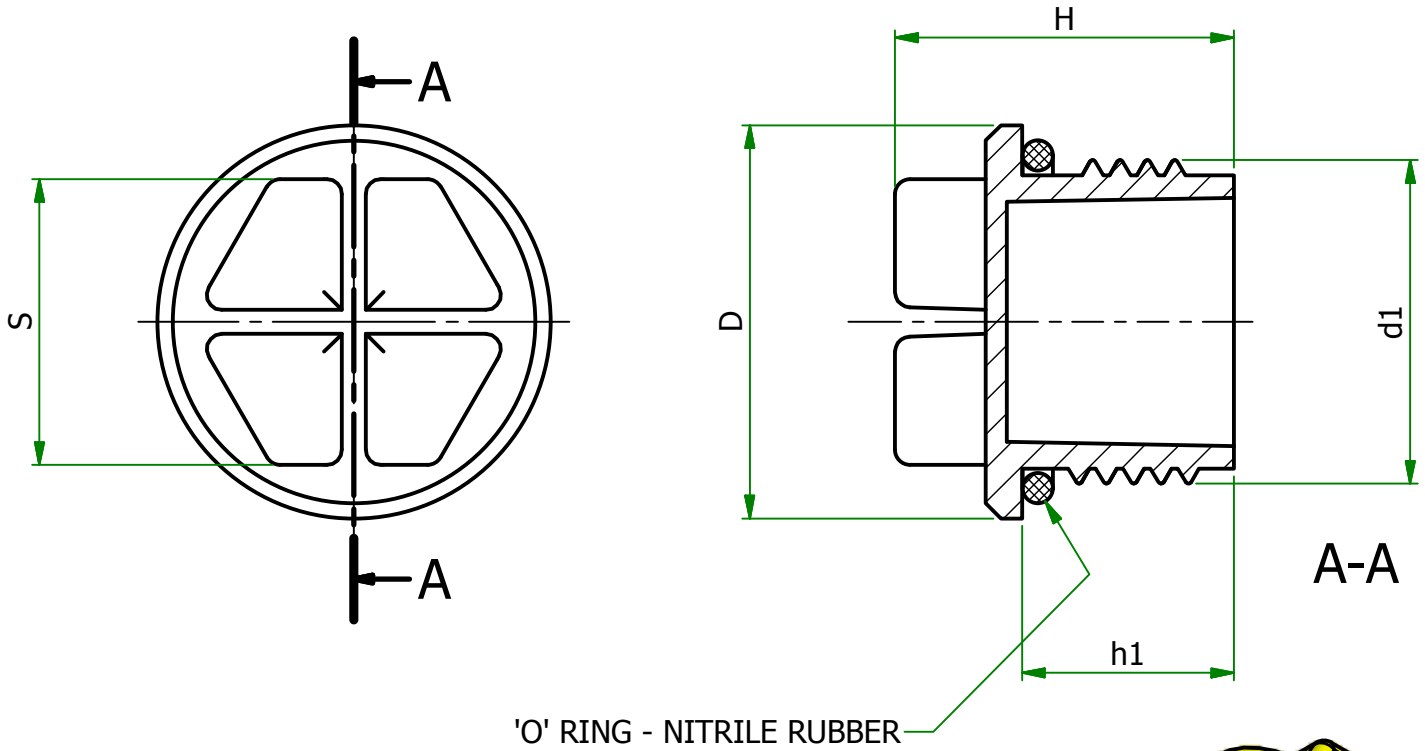

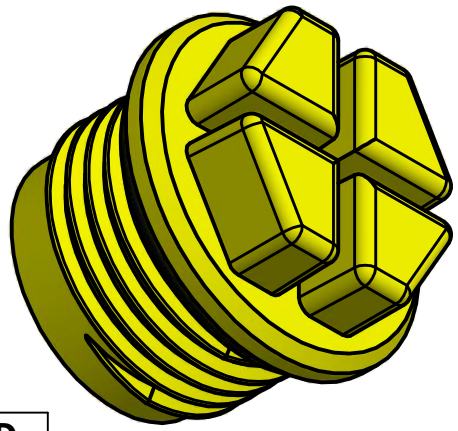

UNCONTROLLED

Part Number	Thread (d1)	D	H	h1	S	PartID
498681	1/8" x 28 BSP	16	17.2	10	7	1051637

Hilltop
Experts in Wire/Cable Management Solutions

UNLESS OTHERWISE STATED

ALL DIMENSIONS IN mm

DO NOT SCALE

LINEAR TOLERANCE

SIZE	(0)	(0.0)	(0.00)
0-10mm	±0.5	±0.15	±0.10
10-30mm	±0.5	±0.20	±0.15
30-50mm	±0.5	±0.30	±0.20
50-100mm	±0.8	±0.50	±0.25
100-200mm	±1.5	±0.80	±0.40
200-300mm	±2.0	±1.20	±0.80
300-500mm	±3.0	±2.00	±1.00
+500mm	±5.0	±3.00	±1.50

THIRD ANGLE PROJECTION

ANGULAR TOLERANCE ±0.5 DEGREES
UNSPECIFIED RADII 0.25mm
DRAFT ANGLE 0.5 DEGREES

ORG.SCALE 2:1

MATERIAL HDPE

ITEM No. 498681

TITLE O-RING THREADED PLUG

DWG.No. P050335

ISSUE No. 1